TGA-MS Evolved Gas Analysis Link details
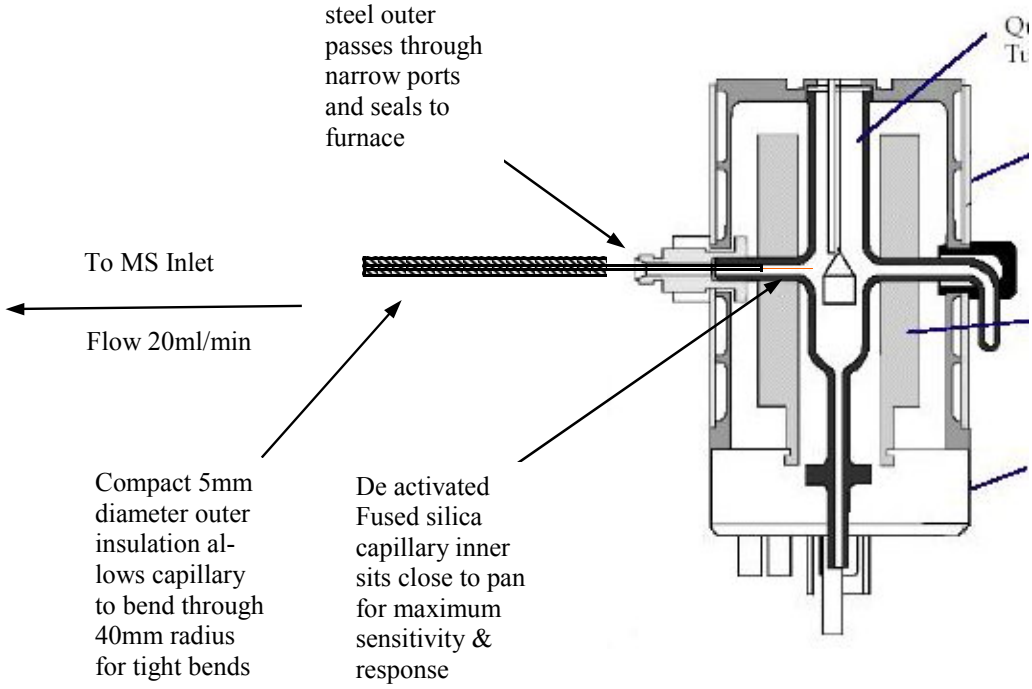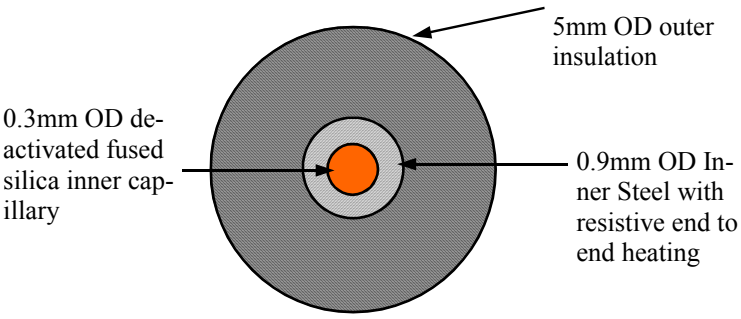
EGA Furnace from manual page 22